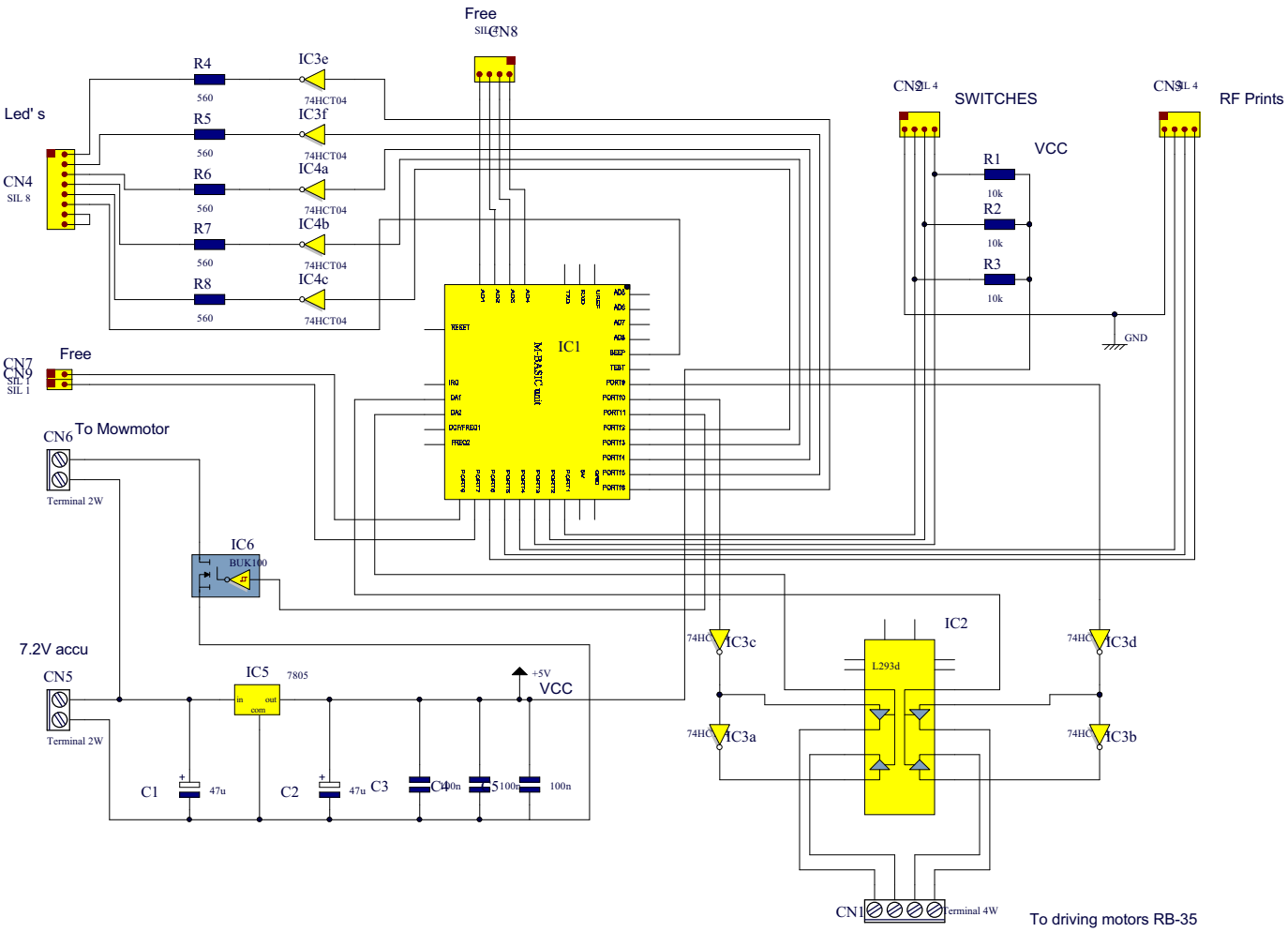
Free
CN8
Led' s
CN4
SIL 8
R4
560
R5
560
R6
560
R7
560
R8
560
IC3e
IC3f
IC4a
IC4b
IC4c
74HCT04
CN2
SIL 4
SWITCHES
CN3
SIL 4
RF Prints
VCC
R1
10k
R2
10k
R3
10k
GND
IC1
M-RASTIC III
CN7
CN9
SIL 1
SIL 1
Free
CN6
To Mowmotor
Terminal 2W
IC6
BUK100
7.2V accu
CN5
Terminal 2W
IC5
7805
in
out
com
+5V
VCC
C1
47u
C2
47u
C3
C4
100n
C5
100n
100n
IC2
L293d
74HC
IC3c
IC3a
IC3d
IC3b
CN1
Terminal 4W
To driving motors RB-35